PRODUCT SPECIFICATION

Part Number

PLBLJ7148-A

Customer	
Customer Part Number	
Description	
Approved By	
Date	

1. 结构尺寸 MECHANICAL OUTLINE

COLOR : AMBER

(未注尺寸公差Unspecified Tolerances is ± 0.3)

颜 色 : 琥珀色

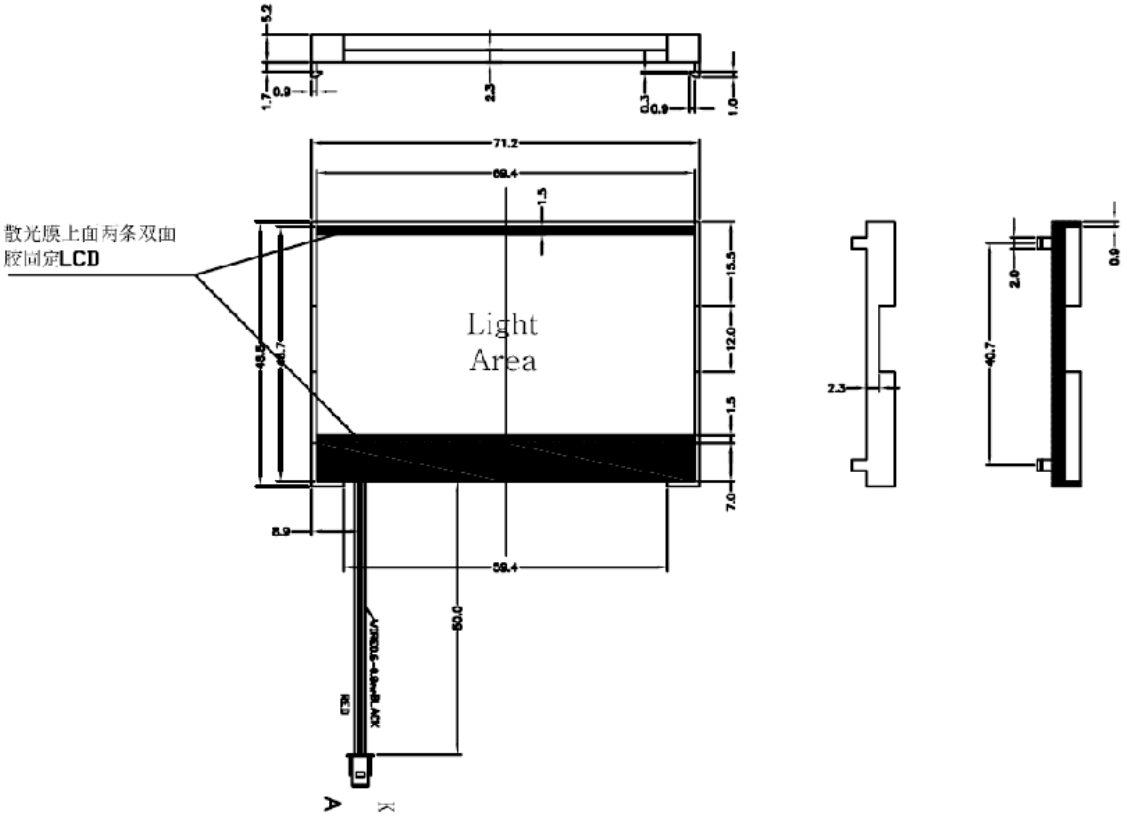

2. 电路图 CIRCUIT DIAGRAM (LED 1X5=5 SMD dies)

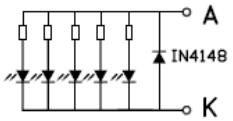

3. 保存和焊接条件 STORAGE & SOLDERING CONDITIONS:

- Store with care. Storing the units in bad condition will cause the reflector sheet and decrease it's adhesive power. Storage The products under the condition: temperature (25°c ±10°C) and humidity (65%RH±20%RH) our recommendation.
- The Soldering Temperature is 260±5°C and Soldering Time should be less than 3 sec, and soldering iron power should be less than 30W.
- The soldering point should be farther than 1.6mm (1/10") from body .
- The product is sensitive to static electricity,So it's necessary to take proper steps when storing and soldering.

- 注意保存,保存条件不好时,会降低反光膜(扩散膜)导光片(反射壳)的粘附力。
  推荐保存条件 : 温度 25°C±10°C
  湿度 65%RH±20%RH
- 焊接温度 260°C±5°C,焊接时间小于3秒
  烙铁功率小于 30W.
- 焊接点应离焊接实体大于1.6 mm.
- 产品对静电敏感,保存及焊接时必须有防静电措施.

4.极限参数 ABSOLUTE MAXIMUM RATINGS (SINGLE LED)

(除非特别说明，环境温度Ta=25°C. Unless specified,The Ambient temperature Ta=25°C)

项目 Item	符号 Symbel	条件 Conditions	值 Rating	单位 Unit
* 极限直流正向电流 Absolute maximum forward current	Ifm		25	mA
* 脉冲驱动时极限正向电流 Peak forward current	Ifp	1 msec脉冲,1/10占空比 1 msec Plus 10% Duty Cycle	60	mA
反向电压 Reverse Voltage	Vr		5	V
* 极限功耗 Power dissipation	Pd		50	mW
工作温度 Operating Temperature Range	Topr		−30~+70°C	°C
贮存温度 Storage Temperature Range	Tstg		−40~+80°C	°C

* 当工作温度高于25°C时，Ifm. Ifp 和 Pd必须降低；电流降低率是 −0.36 mA/°c(直流驱动),或 −0.86 mA/°c(脉冲驱动)，功率降低率是 −0.75 mW/°C. 产品工作电流不能大于对应的工作条件温度 Ifm 或Ifp 的 60 %.

For operation above 25°C,The Ifm Ifp & Pd must be derated,the Curent derating is −0.36 mA/°c for DC drive and −0.86 mA/°c for Pulse drive,the Power dissipation is −0.75 mW/°c. The product working current must not more than the 60 % of the Ifm ir Ifp according to the working temperature.

5.电光特性 ELECTRICAL−OPTICAL CHARACTERISTICS

(除非特别说明，环境温度Ta=25°C. Unless specified,The Ambient temperature Ta=25°C)

项目 Item	符号 Symbol	最小值 min.	典型值 typ.	最大值 max.	单位 Unit	测定条件 Condition
正向电压 Forward Voltage	Vf		3.3		V	If= 60 mA
反向电流 Reverse Current	Ir			10	Am	Vr= 0.8 V
峰值波长 Peak wave length	λρ				nm	If= 60 mA
频谱半宽度 Spectral Line Half width	△λ				nm	If= 60 mA
* 亮度 Luminance	Lv				cd/m²	If= 60 mA

* 亮度值是5个测量点的平均值，亮度最大值比最小值一般小于等于1.3.使用 ST−86LA 亮度计测量，测量光圈 ø 5 mm.

The luminance is the average value of 5 points, and,The Lvmax./Lvmin. is 1.3 max.
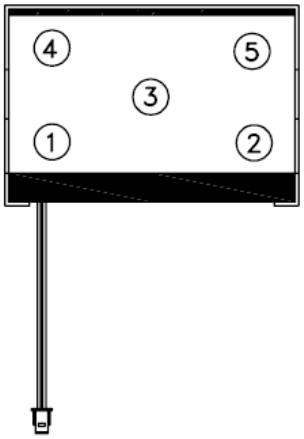
The measurement instrument is ST−86LA luminance,Colorimeter.The caperture is ø 5 mm.